INSPITAL
"innovation for hospital"

DATA SHEET
Single Pendant
Model : FX40.10V

Designed for healthcare facilities seeking costeffective solutions without compromising quality, these low-capacity medical pendants combine German engineering with practicality. They are ideal for environments that require reliable and efficient utility management with moderate load demands.

STANDARDS

Classification	Class 1 (MDD 93/42 EEC)
EU Conformity	CE
Standards	HTM 02-01, HTM 2022, EN 11197, ISO 13485

MATERIAL SPECIFICATIONS

Body	Static Painted (RAL 9002) Aluminum / Sheet Meta
Connection Arms	Static Painted Steel
Connection Pipes	Static Painted Steel Pipe
Covers	Plastic (ABS + PC)

TECHNICAL SPECIFICATIONS

Department	OR & ICU & NICU
Arm Type	Single
Arm Length	1000
Complete length in mm	1000
Length Up to	1200
Payload in kg	110
Payload with e- brake in kg	220 (600mm length)
Vertical Load Newton	
Payload in lbs	243
"Brake System	Friction brake
Optional Magnetic e-brake	-
Rotation angle ceiling	340
Intermediate bearing	-
Rotation angle drop tube	330
Height adjustment	-
Colour	RAL 9010
Electrical Protection Class according to IEC 60601-1	Class 1
Classification according to 93/42 EU and 2017/745 EU	Class 1
IP classification	IP 20

REV.01/03.25

INSPITAL MEDICAL TECHNOLOGY GmbH

P: +49 2131 291 75 00
W: www.inspital.com

Mosel Str. 23, 41464 Neuss
Germany

INSPITAL
"innovation for hospital"

DATA SHEET
Single Pendant
Model : FX40.10V

TECHNICAL DRAWING

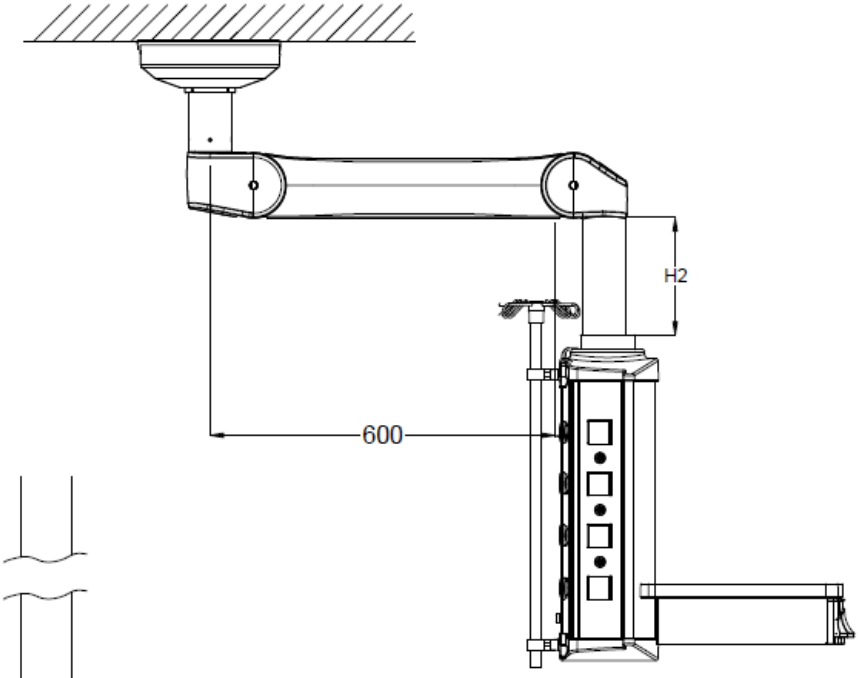

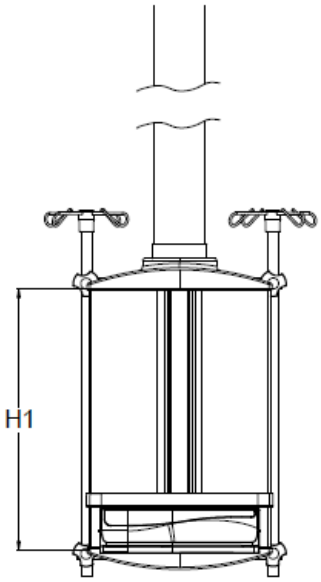

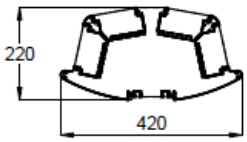

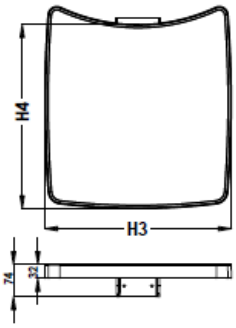

H1 Dimensions	*H2-H3 Dimensions	*H4-H5 Dimensions
600 mm	300 mm	430X430
800 mm	500 mm	530X530
1000 mm	700 mm	
1200 mm	900 mm	
	1100 mm	

- Note: ± 25 mm tolerance is given for metric measurements and ± 5° tolerance is given for angle measurements.

* Product size is optional.

REV.01/03.25

INSPITAL MEDICAL TECHNOLOGY GmbH
P: +49 2131 291 75 00
W: www.inspital.com
Mosel Str. 23, 41464 Neuss
Germany